D. R. Thompson, R. J. Moorhead, and W. D. Smith, “Advanced solid rocket motor (ASRM) communications network analysis using BONeS”, in *Proc. IEEE Southeastcon*, Birmingham, AL, April 12-15, 1992, pp. 276-282.

ADVANCED SOLID ROCKET MOTOR (ASRM) COMMUNICATIONS NETWORK ANALYSIS USING BONeS

D. R. Thompson, R. J. Moorhead, and W. D. Smith
Department of Electrical and Computer Engineering
Mississippi State University
Mississippi State, MS 39762

ABSTRACT

This paper describes the simulation of a proposed campus-wide network for a new manufacturing facility. The proposed network consists of five carrier sense multiple access with collision detection (CSMA/CD) networks on a fiber distributed data interface (FDDI) backbone. In Section 1 the system configuration, the projected traffic pattern, and the proposed protocols are presented. Section 2 describes the models used in constructing the network simulation, while Section 3 contains the results and an analysis of the simulations. Some conclusions are drawn in Section 4.

1.0 THE ADVANCED SOLID ROCKET MOTOR (ASRM) FACILITY

The Advanced Solid Rocket Motor (ASRM) facility at Yellow Creek near Corinth and Iuka, Mississippi is part of a National Aeronautics and Space Administration (NASA) program to develop new solid rocket motors for the Space Shuttle. The facility will be a government-owned, contractor-operated operation. Lockheed Missiles & Space Company, Inc., ASRM Division is the prime contractor and the operation of the facility will be directed by the subcontractor Aerojet ASRM Division. RUST International Corporation is responsible for the engineering and construction of the facility.

Case preparation, propellant mixing, core stripping, core preparation, and motor assembly will be performed at the Yellow Creek facility. The facilities will be automated using the latest technology. An objective of this project is to provide a safe paperless environment. Therefore, a Local Area Network (LAN) is necessary to carry control and managerial information required to run the facility.

The facility will consist of several buildings spread over a large area. Manufacturing will take place in three separate buildings on the Yellow Creek site. A LAN will be required to provide communication for the manufacturing process. The network should be reliable, secure, and provide enough bandwidth to carry all the information [1].

1.1 ASRM system configuration

The proposed network consists of five 10 Megabits per second (Mbps) CSMA/CD networks linked together with a FDDI backbone. Most nodes talk only to the Operations Information System (OIS); there is little peer-to-peer communication. The OIS will also be on the FDDI backbone. The links are listed below:

- Link 1 – Support and Storage
- Link 2 – Final Assembly
- Link 3 – Propellant, Nondestructive Evaluation (NDE), Miscellaneous
- Link 4 – Case Preparation
- Link 5 – Mix Cast
- Link 6 – Operations Information System (OIS)

This work was supported by the National Aeronautics and Space Administration under Grant NAG8-866.

1.1.1 Operations Information System (OIS) The Operations Information System (OIS) is to provide an efficient means to plan and control the manufacturing of solid rocket motors for the ASRM project. The OIS is also the link between the business functions and the manufacturing functions of the facility. The OIS is a VAX cluster consisting of two VAX 6500's and two VAX 4300's. Scheduling, shop floor control, and data collection will be performed by the OIS; these functions will be provided by commercial software packages [1].

1.1.2 Medium The transmission media will be fiber optics which requires a separate fiber for receiving and transmitting. In each of the CSMA/CD LANs, optical hubs will connect the nodes together. Each receiving port of the hub retransmits the signal to all transmitting ports. Fiber optics was chosen because of its immunity to electromagnetic interference (EMI) and also to allow the network to upgrade easily to FDDI in the future if the need arises. Even though optical fibers are more expensive than the standard copper medium of transmission (twisted pair or coax), using fiber optics in a LAN offers several distinct advantages; especially for the given environment [2]:

- Because they use light instead of electricity, fiber optic cables are free from electromagnetic interference, crosstalk, and other types of noise except that which is introduced into the system from the electronic interfaces to the network. This is especially useful for sites with high levels of EMI.
- Since they have a large bandwidth with little inherent loss, optical fibers can provide data rates up to around 100 Gigabits per second (Gbps) over 100 km. One reason for this is that the bandwidth is inversely proportional to the length, while with wire the bandwidth is inversely proportional to the length squared.
- Due to the fact that taps are difficult to place in the network, optical fibers are very secure from unwanted intrusion.
- Since they are physically small and lightweight, optical fibers aid installation and maintenance. An optical fiber is generally 1/6 the weight of an equivalent coaxial cable carrying the same amount of information.
- Because optical fibers currently propagate with very little attenuation, typically as low as 0.2 dB/km, repeaters are not necessary for distances under 100 km.
- Since optical fibers carry no electrical current, they are ideal in situations where a spark could set off volatile substances.

1.2 ASRM Traffic Analysis

All nodes will communicate with the OIS. There will be three main types of nodes [1]:

- Workstations
- Workcells
- Area Supervisory Computers (ASC)

There will be several workstations throughout the facility available to the shop floor managers for entering and retrieving data during manufacturing. There will also be terminals in workcells. Each workcell has a specific job such as a vapor degreaser or a pattern cutting station. Some areas will have Area Supervisory

0-7803-0494-2/92 $3.00 ©1992 IEEE

Computers (ASC) to archive data from several smaller nodes during manufacturing. This information will then be transferred to the OIS. The ASC must store the information in the event of a failed link to the OIS. After the link is restored, information must then be uploaded to the OIS.

1.2.1 Automative control and user response time Since control of the manufacturing will be accomplished over the LAN, the network should be reliable and have redundant links in case a link is lost. Also, the user response time is important because the user will be getting instructions from the OIS. The delay of information on the LAN for a given load is therefore an important consideration.

1.2.2 Data collection Large amounts of data must be stored because of the critical nature of the solid rocket motors in the Space Shuttle program. It is crucial that none of this data is corrupted or lost. Therefore, the network should be reliable, robust, and have redundant links.

1.3 Protocols

The manufacturing data network proposed for the Yellow Creek site is a hybrid of FDDI and CSMA/CD. The connections from building to building will be CSMA/CD based. FDDI will link the five CSMA/CD links together for processing in the OIS computer. All of the fibers installed in the system will be FDDI compatible 62.5 micron fibers to easily migrate to a full FDDI system, if the need arises.

1.3.1 FDDI FDDI, or fiber distributed data interface, is a network standard developed by the American National Standard Institute (ANSI X3T9.5) that operates at 100 Mbps. FDDI was started as a high−speed network to provide packet data between processors and fast storage devices. Now, FDDI is often used as a high-speed, low-error rate backbone to interconnect slower LAN's like IEEE 802.3, 802.4, or 802.5. FDDI uses optical fibers for the communication medium in networks with radius greater than a few hundred feet and has a timed token media access protocol with a ring topology. For the transmitting devices, light emitting diodes (LEDs) are generally used. By using multi-mode optical fibers, links around 2 km are standard. By using single-mode optical fibers with laser diode transmitters the link distance can be extended up to 60 km. FDDI has several distinct advantages over other protocols [3]:

- Up to 1000 connections.
- Total fiber path length up to 200 km.
- Bit error rate (BER) less than 2.5E − 10

FDDI uses a form of serial baseband transmission that combines both the data and the clock transmissions in a single bit stream. Because the clock information is transferred with the data, synchronization is accomplished with the recovery of the data.

FDDI can use Manchester encoding, like Ethernet, but normally FDDI uses 4b/5b with NRZI encoding. 4b/5b means that it uses combinations of five code bits to represent a symbol of four bits. NRZI is an edge-type code that is short for "NonReturn to Zero Invert on ones" − which in optical fibers deals with polarity transitions. Every polarity change results in a logical "0" (low) while no change in polarity results in a logical "1" (high). Manchester encoding, on the other hand, is a level-type code where a "zero" starts at logic low and makes a low to high transition in the middle of a clock cycle, and a "one" starts at logic high and makes a high to low transition in the middle of a clock cycle. The 4b/5b NRZI coding is chosen over the standard Manchester encoding system that Ethernet uses for two major reasons:

- The 4b/5b with NRZI encoding is more efficient, requiring cheaper components.
- Along with the frame formats, the 4b/5b with NRZI encoding allows easier detection and correction of errors.

The 4b/5b encoding scheme is more efficient than Manchester encoding in that it converts four data bits to five code bits, resulting in an 80% efficiency. This requires the optical components to operate at 125 Mbps in order to obtain the standard 100 Mbps required for FDDI. With the Manchester encoding scheme, there are two pulses per data bit resulting in a worst case condition of 50% efficiency. This would require 200 Mbps components for the system to run at the standard 100 Mbps.

1.3.2 CSMA/CD The Ethernet system was initially designed by XEROX and uses carrier sense multiple access with collision detection (CSMA/CD). Many different stations are connected to a common bus. If a station has data to send and the bus is silent, the station will try to transmit a packet of data and then wait for an acknowledgement (ACK) from the receiving station. Once the receiving station sends an ACK, the transmitting station will send another packet. If two stations try to transmit at the same time then the information will collide, at which point each station waits a random amount of time before trying to transmit again. If the information from a station collides again, then the station waits a longer time before trying to transmit. Each station has an exponential backoff algorithm so the more collisions the longer each station will wait and the bus will quiet down.

The nominal data rate for Ethernet is 10 Mbps. Each station is connected to the coax at regular intervals of 2.5 meters to reduce reflections. The maximum link length is 2.5 km with repeaters. A maximum of 1024 stations can be connected to one Ethernet segment. Normally, coax cable is used to interconnect the computers although optical fibers and twisted pair can be used now. The standard topology is a bus topology.

The IEEE 802.3 CSMA/CD standard sends data in variable size frames commonly called "packets" with a minimum spacing of 9.6 us. The frame construction consists of [4]:

- 64 bit preamble
- 48 bit destination address
- 48 bit source address
- 16 bit type field
- 46 to 1500 bytes data field
- 32 bit CRC error check field

The preamble provides synchronization and frame mark. The destination address contains the physical addresses of a particular station or a group of stations. The source address contains the physical address of the transmitting station. The type field is used by high-level network protocols. The data field contains the data being sent. The error check field consists of a cyclic redundancy check (CRC) which is generated by the transmitting station. The receiving station generates a CRC when it receives a packet and checks it against the received CRC. If they do not match, then the transmission was garbled and the receiving station will ask for the packet again. This continues until an ACK is received, at which time the transmitting station can send another packet. The IEEE 802.3 standard allows 15 re-tries before the station times out.

1.4 Research Objective

The objective of the research is to analyze the proposed network to determine its performance at different loads. The two evaluation parameters used to judge the network are throughput and delay. The throughput is the effective bit rate of the system. It does not include the overhead bits used by the protocol or the packets that had to be transmitted again. The delay in a LAN is judged by the delay per packet.

2.0 SIMULATION WITH BONeS

The commercial software package BONeS [5] -- Block Oriented Network Simulator -- was purchased from Comdisco Systems, Inc. and installed. The software is written in LISP and allows the

user to graphically piece together blocks to model various networks such as FDDI, CSMA/CD, and X.25. For each part of the model it generates C source code. During a simulation, it links the code together and creates an executable to do the simulation.

BONeS is an event driven simulation. Each event has to be triggered by a previous event called a "trigger". If a block is not "triggered" then there will be no output. Therefore, when building a model using the provided blocks, race conditions must be avoided. Parallel inputs should be avoided. Instead, blocks should be cascaded to prevent race conditions.

2.1 Models

Models of CSMA/CD nodes, FDDI nodes, and bridges are included in the BONeS library. Also, an example of a campus-wide network is included in version 1.5.1 of BONeS [5]. These models were used to simulate the ASRM network consisting of five CSMA/CD LAN's linked together with a FDDI backbone.

2.1.1 CSMA/CD Workstation model BONeS comes with a complete model for a CSMA/CD workstation which includes the carrier sense, collision detection, exponential backoff, attempt limit, slot time, and the interframe gap. The parameters were set to the standard IEEE 802.3 CSMA/CD standards and are listed below:

- Backoff limit = 10
- Attempt limit = 16
- Slot time = 5.12×10^{-5} seconds
- Interframe gap = 96 bits
- Transmission speed = 1×10^{7} bits per second

The following parameters were also set:

- Mean packet length = 6000 bits
- Propagation delay of an Ethernet transceiver = 2.0×10^{-6} seconds

2.1.2 FDDI backbone BONeS comes with a complete model for a FDDI workstation. Six FDDI workstation models were used to model the FDDI backbone of the ASRM network. The parameters are listed below [5]:

- Capacity = 100 Mbps
- Target Token Rotation Time = .01 seconds
- Operational Target Rotation Time = .01 seconds
- Propagation Delay between nodes = 1.0×10^{-5} seconds
- Ring Latency = 6.006×10^{-5} seconds
- Synchronous Allocation = 0.0 seconds
- Synchronous Buffer Size = 0
- Asynchronous Buffer Size = 2000 elements

2.1.3 Optical Hub model The model of the optical hub passes all frames that are received on the receive fiber to all transmitting ports with delay. This delay is caused by the light-to-electrical and electrical-to-light conversion. The delay in the optical hub was set to one nanosecond. The optical hub model is shown in Figure 1.

2.1.4 Traffic Source model A model to send a set number of packets randomly at Poisson intervals was developed. Once triggered by the Poisson generator the traffic source model sends a set number of packets as fast as possible. Another packet is sent as soon as a packet is sent successfully. The traffic source model is shown in Figure 2. The parameters for the traffic source model

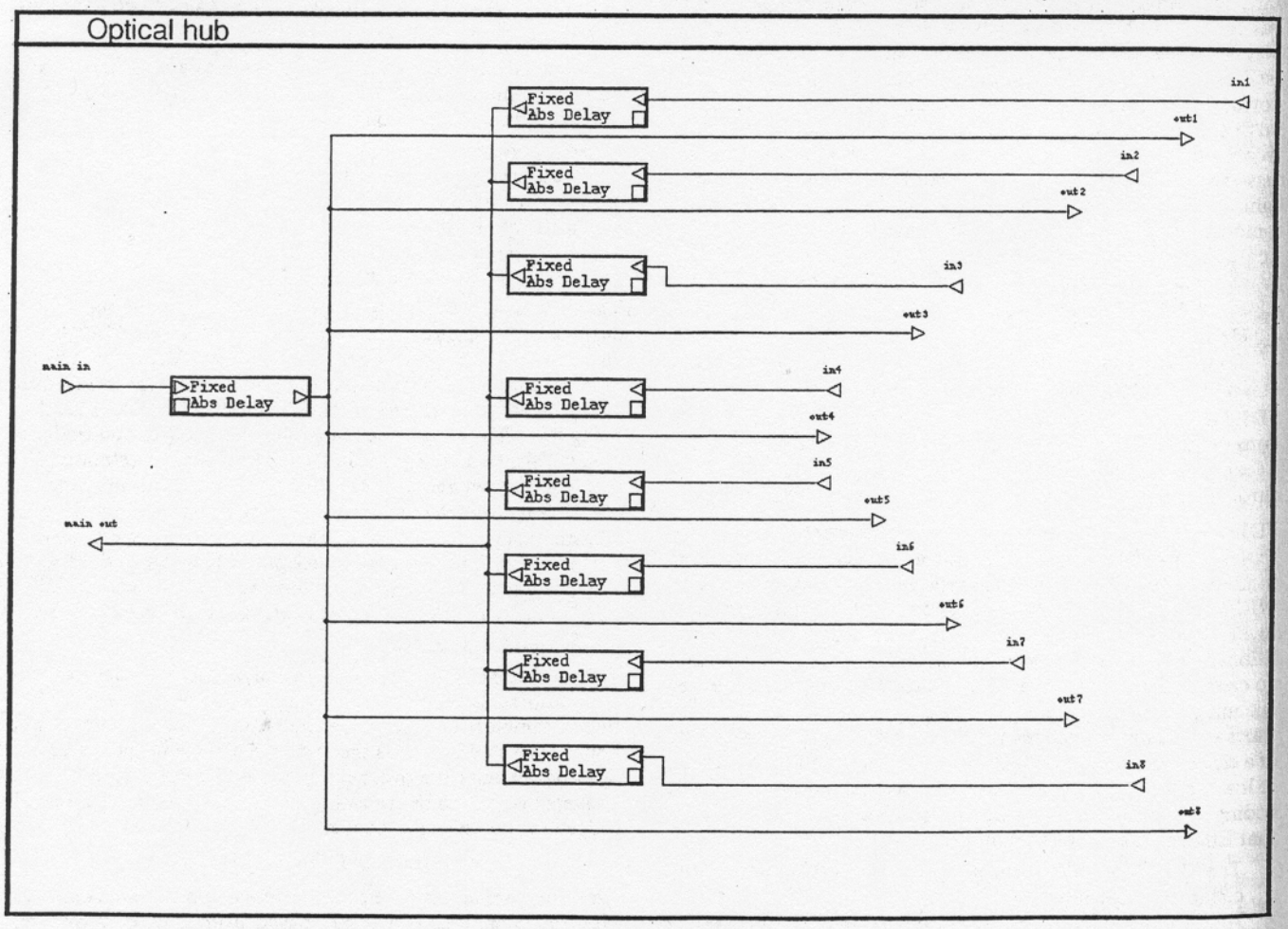

Figure 1 Optical hub model

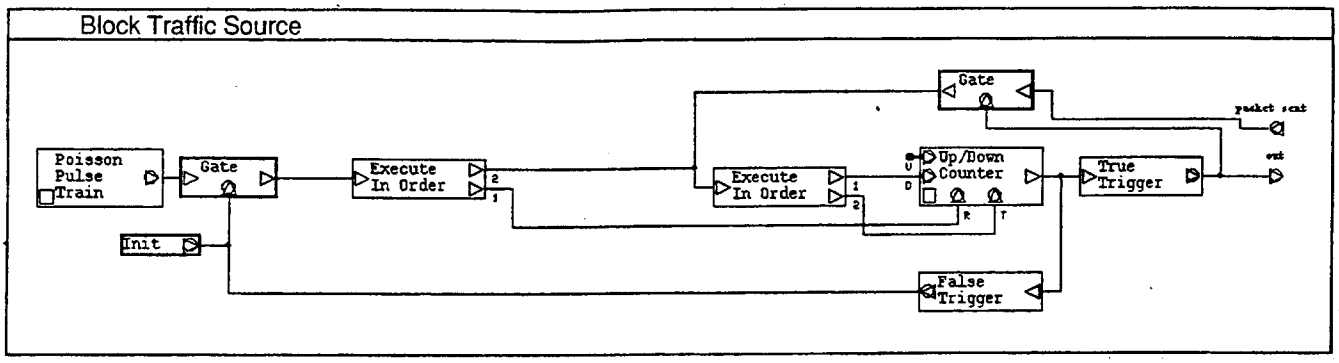

Figure 2 Traffic source model

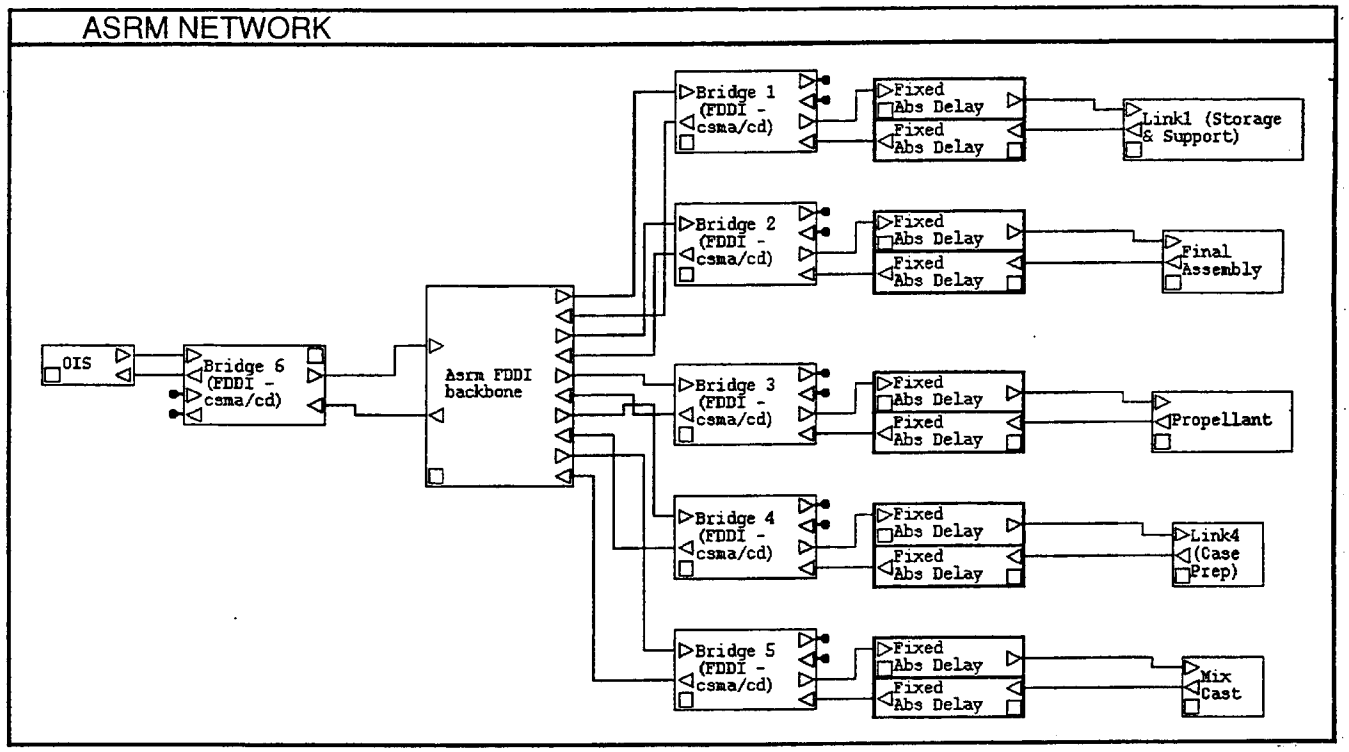

Figure 3 ASRM network model

are listed below:

- interarrival mean of blocks
- number of packets

The model was set to send one packet per trigger.

The traffic source model was developed to model a workstation sending a block of data such as a text or graphics screen. During one iteration of a simulation, the traffic source model sends a set number of packets at an average interarrival rate set by the user. The interarrival rate has a Poisson distribution because traffic on a LAN tends to have a Poisson distribution.

2.2 Simulations

The complete ASRM network was modeled using BONeS. A model for each of the five CSMA/CD LAN's was developed and linked together via models for bridges to the model of the FDDI backbone. The complete network is shown in Figure 3; Link 4 (Case Preparation) is broken out in Figure 4 to show an example link. All CSMA/CD nodes were set to the IEEE 802.3 standards. The OIS computer was modeled as a single CSMA/CD node. All nodes sent packets only to the OIS per the ASRM communication model. The OIS sent a packet by randomly picking a node out of the address table. There were 129 CSMA/CD nodes in the simulation.

The traffic intensity per node was varied from 40 kbps to 89 kbps at ten points and the throughput and mean delay per packet for each of the links was collected using the probes provide in BONeS. The traffic intensity was varied with an exponential function to show the knees of the curves. The simulation time per iteration was set to ten seconds. The actual computer time to do the simulation was approximately 40 hours on a Sun Sparcstation II GX with 16 MB of memory.

3.0 SIMULATION ANALYSIS AND RESULTS

Figure 5 is a plot of the Mean Delay per Packet versus Traffic Intensity and Figure 6 is a plot of the Throughput versus Traffic Intensity. Both were created using the Post Processor in BONeS. All six links were plotted on each plot for comparison.

3.1 Delay per Packet

The Mean Delay per Packet versus Traffic Intensity plot is shown in Figure 5. Notice that all the links show a knee at a particular traffic intensity. Beyond this traffic intensity, many nodes are not able to transmit because of the heavy traffic. The default delay per node is zero. Thus, the mean delay of each LAN decreases once the LAN is overloaded.

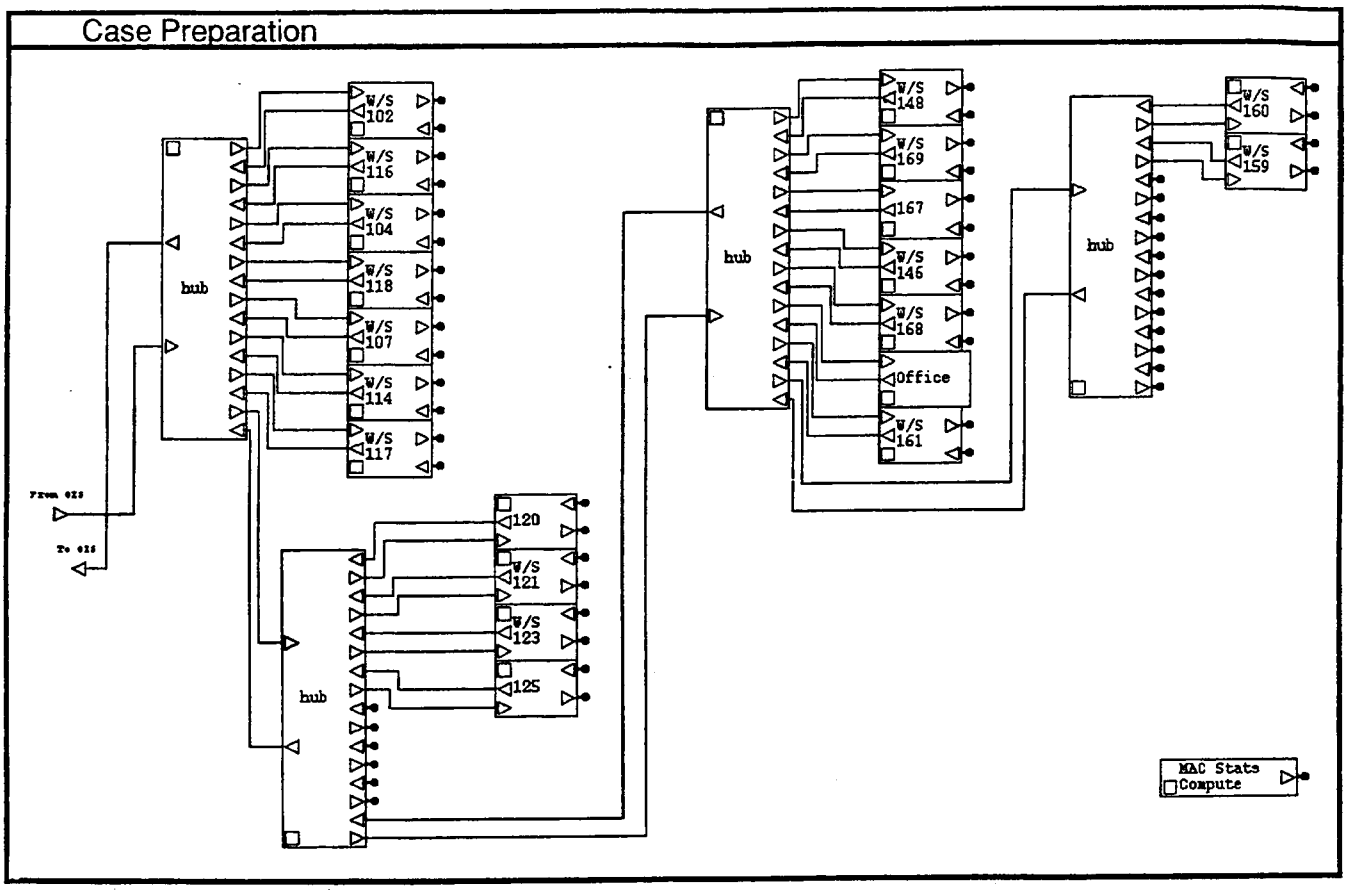

Figure 4 Case preparation model

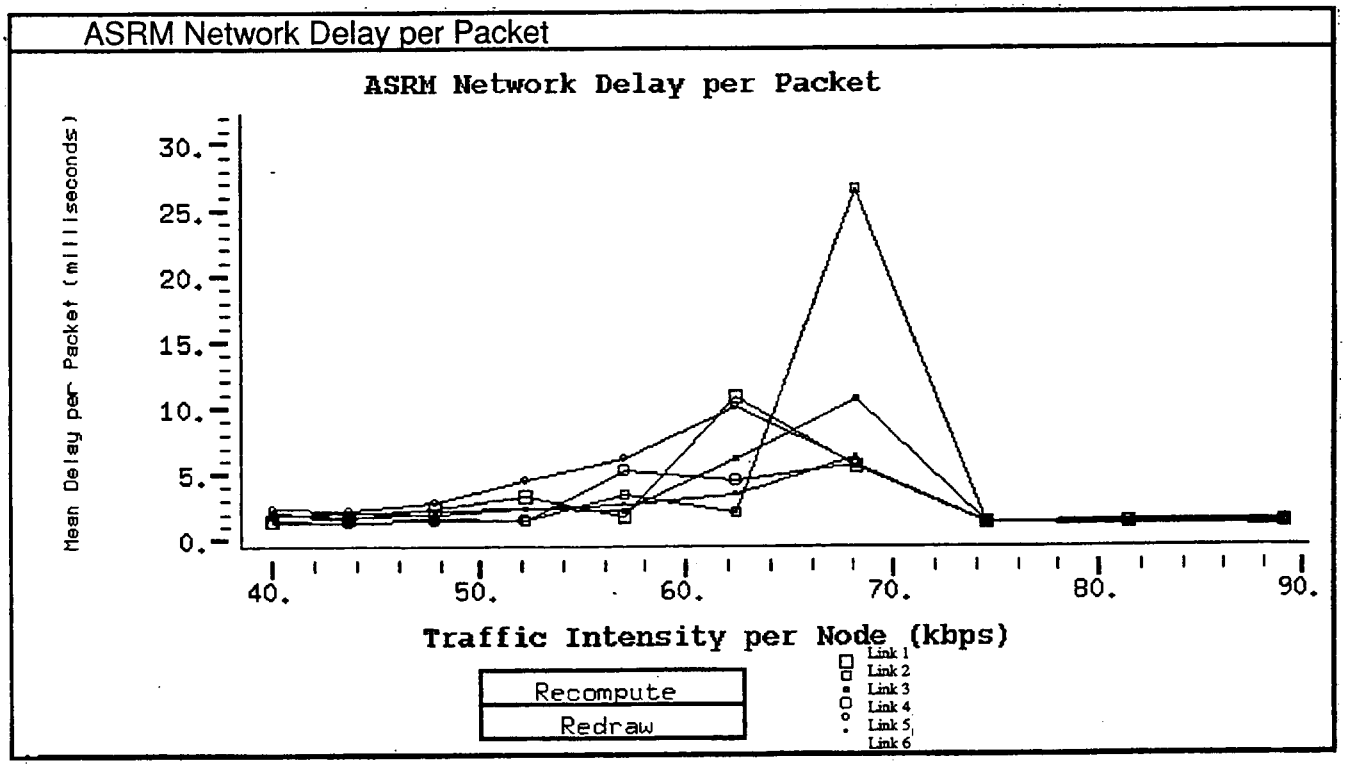

Figure 5 Mean delay per packet versus traffic intensity

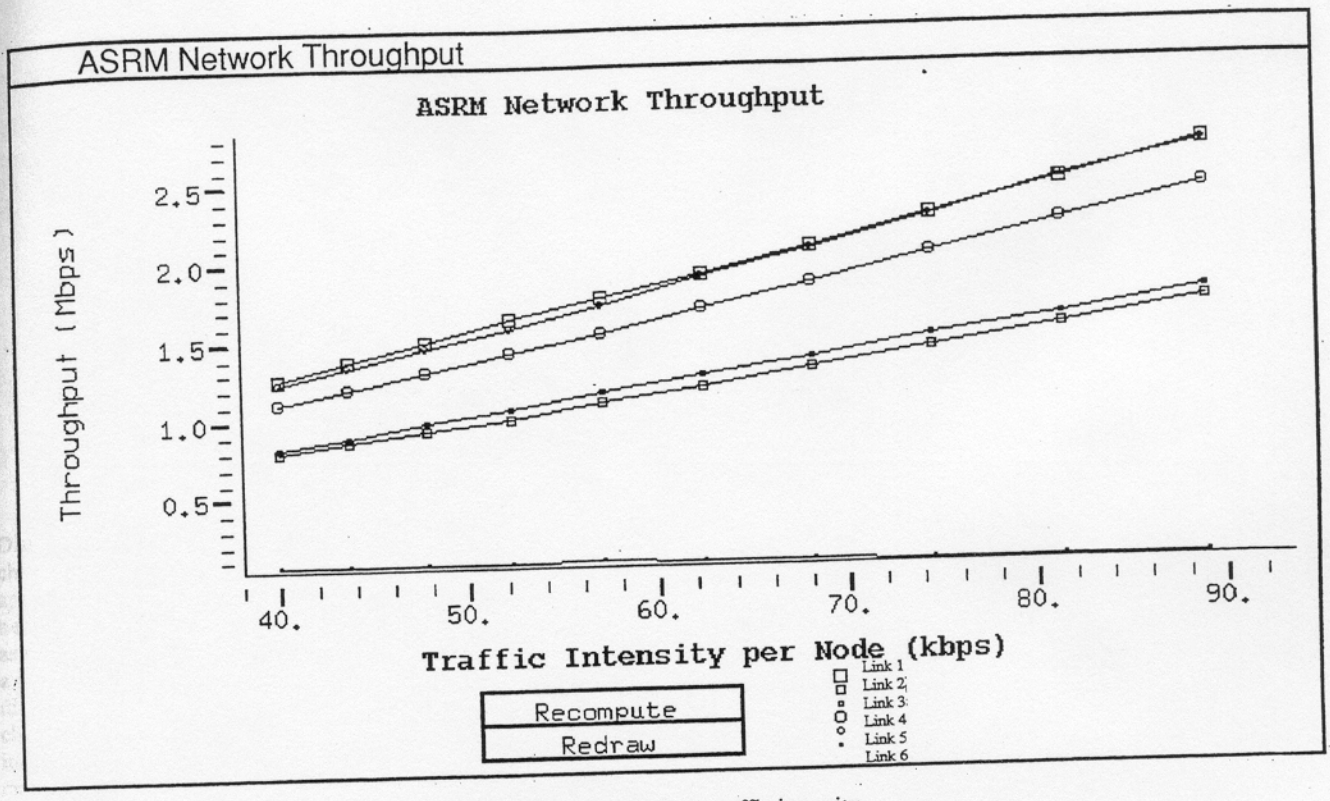

Figure 6 Throughput versus traffic intensity

Table 1 Maximum delay per packet and throughput for each of the links.

Link number	Number of nodes	Maximum delay per packet (milli-seconds)	Traffic intensity per node at maximum delay per packet (kbps)	Throughput at maximum delay per packet (Mbps)
Link 1	30	10.6	62	1.896
Link 2	20	26.4	68	1.288
Link 3	20	10.5	68	1.342
Link 4	27	5.5	68	1.821
Link 5	30	10.0	62	1.896

The traffic intensity at which the maximum delay per packet occurred for each link was recorded from the plot shown in Figure 5. This information is summarized in Table 1. Notice that Link 1 and Link 5 saturate first at about 62 kbps per node. This is because Link 1 and Link 5 have the most number of nodes. Link 1 and Link 5 have 30 nodes.

3.2 Throughput

The Throughput versus Traffic Intensity plot is shown in Figure 6. The curve shows the throughput increasing linearly with the traffic intensity per node. But, the analysis of the mean delay per packet shows that the links are overloaded beyond a certain traffic intensity. What is happening in the simulation is that only one node is able to transmit and all others cannot. The throughput beyond this knee is only available for one node. Therefore, the throughput for each of the links is compared at the traffic intensity where the maximum delay per packet occurred. The throughputs ranged from 1.288 Mbps for Link 2 to 1.896 Mbps for Link 1 and Link 5. This is shown in Table 1.

4.0 CONCLUSIONS

The FDDI ring provided ample bandwidth as was expected. However, there is a possibility of overload for each link. The proposed network is overloaded at 62 kbps per node for links one and five and is overloaded at 68 kbps per node for links two, three, and four. This is assuming a worst case condition where all nodes are trying to transmit at the same time. Notice that the sum of the throughputs adds to 8.243 Mbps. This is approaching the maximum throughput of 10 Mbps for the OIS CSMA/CD node.

The analysis of the ASRM network was simplified by using the commercial software BONeS. The software allows the user to graphically build a network. The ASRM simulation was built using several components from the BONeS library. BONeS also allows the user to build his own modules. A very detailed simulation can be accomplished with BONeS. However, this also means that building a simulation can be a complex task and the actual time to do the simulations can be very long.

At this point in time, it has been proposed to use data over voice links for much of the non-manufacturing communications. This is primarily a cost saving proposal. Discussion of this proposal is beyond the scope of this paper.

REFERENCES

[1] Operations Information System Computer System Specification for ASRM. Rust International Corporation, 1990, Contract 21-3727.

[2] Marion, R. F. Jr., "Optical fibers in local area networks", Advances in Local Area Networks, The Institute of Electrical and Electronics Engineers, Inc., New York New York, 1987, pp. 224-243.

[3] Jain, Raj, "Error Characteristics of Fiber Distributed Data Interface (FDDI)", IEEE Transactions on Communications, August 1990, Vol. 38, No. 8, pp. 1244-1252.

[4] Madron, Thomas William, Local area networks: the next generation, John Wiley & Sons, Inc. New York, 1990, pp. 176-199.

[5] BONeS LAN Model Library Guide. USA: Comdisco Systems, Inc., 1991, pp. 9-1 – 9-28.